WASHING

—

HIGH SPIN WASHERS
HIGH CAPACITY
LA-100C/120C TP2



CHARACTERISTICS

TP2
- User friendly and totally programmable 7”.
- USB Connection. PC software free of charge for programming, traceability, data analysis.
- Videos on display (ads, instructions)
- 37 languages.
- 8 dosing signals as standard.

G FACTOR
- High G-FACTOR 350.

EFFICIENCY
- Intelligent consumption.
- Optimal loading.
- Water Recovery tanks ready: KRS.
- Low water consumption.

VERSATILITY
- Electric < > Hot water.
- Wet cleaning features.

CONNECTIVITY
- IoT - FagorKonnect standard.
- Remote technical service.
- Managemant of laundries: OPL.
- Remote payment.

ERGONOMICS
- Biggest door diameters: Ø700.
- Easy opening/closing system for door lock.

MAINTENANCE
- Equivalent parts for all models: contactors, electronic devices, gear.
- Technical menu: traceability, error diagnosis.

OTHERS
- Drum and tub in stainless steel AISI 304.
- 3 water inlets.
- Air inlet.
- Soft mounted, free standing washers.
- Panels in skinplate.
- Easy to install, no need of fixation to the floor.
- CB and WRAS approved product. Option ETL.
- High spin washers with suspended drum.

OPTIONS

- DQ-2 Dosing pump kit.
- Extra dosing pump DB-1.
- Double drain.
- Tropicalized model: protected board.
- Tilting options: frontal or double tilt.
- Auto Weight: automatic weighing sensor system on feet (Not available with tilting kits).
- Relay card with 6 extra dosing signals: up to 14 signals.
- Stainless steel AISI 304 outer casing.
- Double heating E+S.
- Maritime voltage for electric models: 440V III 50/60 Hz No neutral.

TECHNICAL DATA
HIGH SPIN WASHERS | HIGH CAPACITY | LA-100C/120C TP2

	U.	LA-100C	LA-120C
DRUM			
Load capacity 1:9 / 1:10	Kg	105/95	130/115
Volume	l	950	1150
	gal	250,9	303,7
Diameter	mm	1360	1360
	inch	53,5	53,5
Depth	mm	637	775
	inch	25	30,5
GENERAL DETAILS			
Washing speed / Spining speed	r.p.m.	34/678	34/678
G Factor	-	350	350
Maximum force transmitted	KN	37,77 ±5,25	37,77 ±5,25
Frequency-dynamic force	Hz	11,33	11,33
Noise level	dB	< 70	< 70
Coin laundry version	-	No	No
Double drain	-	Opt.	Opt.
Weighing System / Tilting System	-	Opt.	Opt.
SLUICE option	-	No	No
DOOR			
Height center door / Height door	mm	1.330 / 900	1.330 / 900
	inch	52,3"/35,4"	52,3"/35,4"
Diameter	mm	700	700
	inch	27,5"	27,5"
POWER			
Motor	kW	15	15
Electric heating power	kW	-	-
Total electric power (electric model)	kW	-	-
Total electric power (hw, steam model)	kW	15	15
CONNECTIONS		STEAM/HOT WATER	STEAM/HOT WATER
Tension 230V - III + T	Nº x mm²/A	4x16 / 63A	4x16 / 63A
	Nº x AWG/A	4x5 / 70A	4x5 / 70A
Tension 400V - III + N + T	Nº x mm²/A	5x6 / 40A	5x6 / 40A
	Nº x AWG/A	5x9 / 45A	5x9 / 45A
Steam inlet (Steam model)	inch	1-1/4"	1-1/4"
Maximum steam consumption (Steam model)	Kg/h	26,5	26,5
Water inlet	inch	1-1/2"	1-1/2"
Water main pressure	Kg/cm^2	2-4	2-4
Water consumption	Lit/h	650*/800**	780*/960**
	GLP	171,71*/211,34**	206,05*/253,6**
Drain	mm/inch	4"	4"
Drainage capacity	Lit/min	500	500
	GPM	132	132

DIMENSIONS / PACKING DIMENSIONS			
Net width / Gross width	mm	1.836 / 1.940	1.836 / 1.940
	inch	72,2"/76,3"	72,2"/76,3"
Nwt depth / Gross depth	mm	1.710 / 2.030	1.832 / 2.030
	inch	67,3"/79,9"	72,1"/79,9"
Net height / Gross height	mm	2.245 / 2.290	2.245 / 2.290
	inch	88,3"/90,1"	88,3"/90,1"
Net weight / Gross weight	Kg	2,300/2,600	2.762 / 3.058
	lb	5070,6/5732	6089,1/6741,7
Volume	m^3	9	9
	ft^3	317,8	317,8

*Programme ECO
**Programme 60ºC

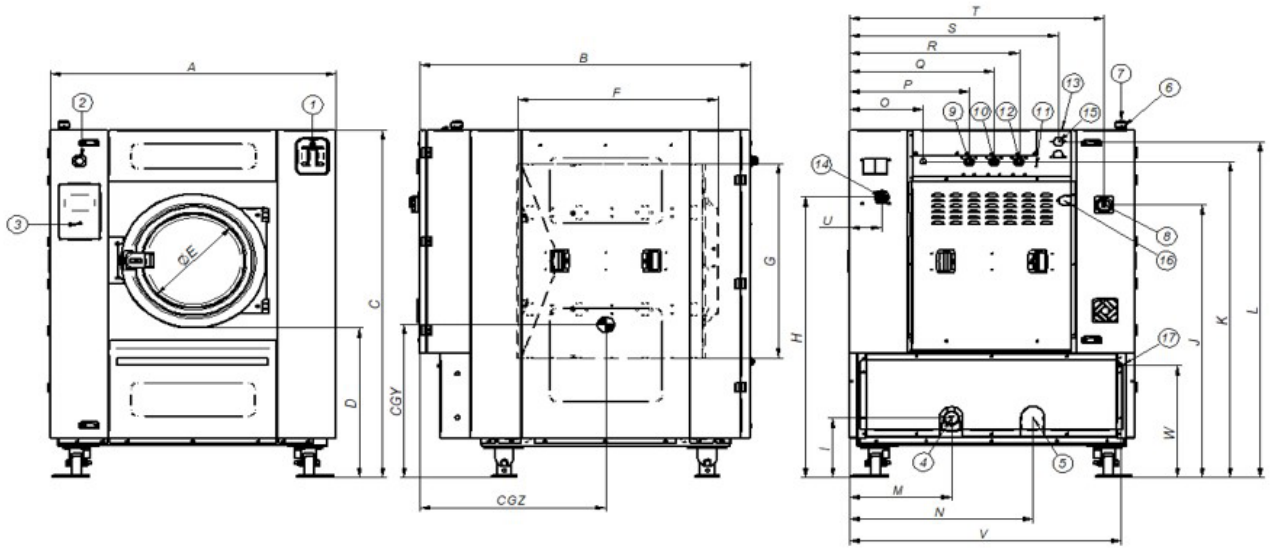

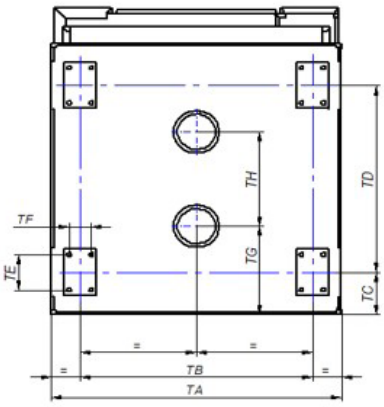

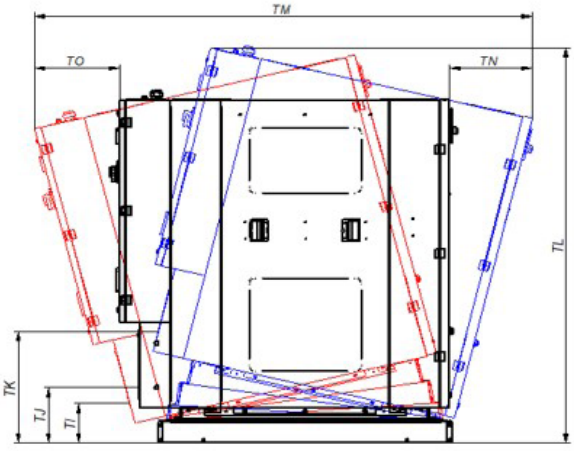

01. Soap dispenser
02. Emergency stop
03. USB port
04. Drain 1
05. Drain 2
06. Electric connection to liquid soap pump
07. Electrical connection
08. Main switch
09. Auxiliar water inlet
10. Hot water inlet
11. Equipotential connection
12. Cold water inlet
13. Steam output
14. Liquid soap connection
15. Steam connection
16. Air intake
17. Ethernet port

	A	B	C	D	E	F	G	H	I	J	K	L	M	N	O	P	Q	R	S	T	U	V	W	X	Y	CGY	CGZ
LA-100C TO2	1.836	1.710	2.245	945	700	792	1.350	1.740	336	1.781	2.038	2.110	1.095	1.092	494	634	774	954	994	1.239	1.646	165	2.049	2.050	717	853	1.025
LA-120C TP2	1.836	1.832	2.245	945	700	930	1.350	1.740	336	1.781	2.038	2.110	1.095	1.092	494	634	774	954	994	1.239	1.646	165	2.049	2.050	717	853	1.130

	TA	TB	TC	TD	TE	TF	TG	TH	TI	TJ	TK	TL	TM	TN	TO
LA-100C TO2	1.765	1.615	200	1.161	190	110	375	806	210	330	667	2.504	2.636	496	491
LA-120C TP2	1.765	1.615	200	1.344	190	110	375	990	254	330	662	2.465	2.672	419	423