# WASHING

# HIGH SPIN WASHERS
## LOW AND MEDIUM CAPACITY
## LA-35C/45C TP2



## CHARACTERISTICS

### TP2
- User friendly and totally programmable 7”.
- USB Connection. Online platform free of charge for programming, telemetry, data analysis… thanks to the IoT.
- Videos on display (ads, instructions).
- 37 languages.
- 8 dosing signals as standard.

### G FACTOR
- High G-Factor: G-FACTOR 450.

### EFFICIENCY
- Intelligent consumption.
- Optimal loading.
- Water Recovery tanks ready: KRS.
- Low water consumption.

### VERSATILITY
- Make to order: customisation.
- OPL < > COIN.
- Electric < > Hot water.
- Drain valve < > Pump.
- Wet cleaning features.

### CONNECTIVITY
- IoT - FagorKonnect standard.
- Remote technical service.
- Managemant of laundries: OPL and COIN.
- Remote payment.

### ERGONOMICS
- Biggest door diameters: Ø560.
- Easy opening/closing system for door lock.

### MAINTENANCE
- Hinged control panel: easy and ergonomic access.
- Technical menu: statistics for technicians and maintenance with external console (with console option).

### OTHERS
- Grey skinplate outer casing.
- Drum and tub in stainless steel AISI 304.
- Detergent dispenser with 4 compartments.
- Electronic control of imbalance with frequency control.
- LOADING AID system: water and rotation control.
- CB and WRAS approved product. Option ETL.
- High spin washers with suspended drum.

## OPTIONS

- DQ-2 Dosing pump kit.
- Extra dosing pump DB-1.
- Double drain.
- Normally closed valve.
- Water FULL FLOW: recirculation of bath water.
- Levelling feet.
- Auto Weight: automatic weighing sensor system on feet (Includes kit with 6 extra dosing signals).
- Relay card with 6 extra dosing signals: up to 14 signals.
- Reversible door opening.
- Tropicalized model: protected board.
- Steam kit to transform an E or HW heated machine into steam version.
- Plinth to align loading height (door base at 850mm).
- Stainless steel AISI 304 outer casing.
- Stainless steel AISI 304 front panel (LA-35C).
- Maritime voltage for electric models: 440V III 50/60 Hz.
- No neutral.
- Voltage 230 V III 50/60 Hz.
- Coin/token kit.
- Auto unlock kit for the door.

# TECHNICAL DATA
## HIGH SPIN WASHERS | LOW AND MEDIUM CAPACITY | LA-35C/45C TP2

| | U. | LA-35C TP2 | | LA-45C TP2 | |
|---|---|---|---|---|---|
| DRUM | | | | | |
| Load capacity 1:9 / 1:10 | Kg | 39/35 | | 47/42 | |
| Volume | l | 350 | | 450 | |
| | gal | 92,4 | | 118,8 | |
| Diameter | mm | 860 | | 860 | |
| | inch | 33,8 | | 33,8 | |
| Depth | mm | 602 | | 720 | |
| | inch | 23,7 | | 28,3 | |
| GENERAL DETAILS | | | | | |
| Washing speed / Spining speed | r.p.m. | 42,5/966 | | 42,5/966 | |
| G Factor | - | 450 | | 450 | |
| Maximum force transmitted | KN | 7,36 ±2,45 | | 7,36 ±2,45 | |
| Frequency-dynamic force | Hz | 14,3 | | 14,3 | |
| Noise level | dB | < 70 | | < 70 | |
| Coin laundry version | - | Yes | | No | |
| Double drain | - | Opt. | | Opt. | |
| Weighing System / Tilting System | - | Opt./No | | Opt./No | |
| SLUICE option | - | No | | No | |
| DOOR | | | | | |
| Height center door / Height door | mm | 1000 / 640 | | 1000 / 640 | |
| | inch | 34,8"/21,2" | | 34,8"/21,2" | |
| Diameter | mm | 560 | | 560 | |
| | inch | 22" | | 22" | |
| POWER | | | | | |
| Motor | kW | 6 | | 6 | |
| Electric heating power | kW | 21 | | 21 | |
| Total electric power (electric model) | kW | 22 | | 22 | |
| Total electric power (hw, steam model) | kW | 6 | | 6 | |
| CONNECTIONS | | ELECTRIC | STEAM/HOT WATER | ELECTRIC | STEAM/HOT WATER |
| Tension 230V - III + T | Nº x mm²/A | 4x16 / 63A | 4x4 / 32A | 4x16 / 63A | 4x4 / 32A |
| | Nº x AWG/A | 4x5 / 80A | 4x11 / 30A | 4x5 / 70A | 4x11 / 30A |
| Tension 400V - III + N + T | Nº x mm²/A | 5x6 / 40A | 5x1,5 / 16A | 5x6 / 40A | 5x1,5 / 16A |
| | Nº x AWG/A | 5x9 / 45A | 5x15 / 15A | 5x9/ 45A | 5x15 / 15A |
| Steam inlet (Steam model) | inch | 3/4" | | 3/4" | |
| Maximum steam consumption (Steam model) | Kg/h | 18 | | 18 | |
| Water inlet | inch | 3/4" | | 3/4" | |
| Water main pressure | Kg/cm² | 2-4 | | 2-4 | |
| Water consumption | Lit/h | 228*/280** | | 293*/360** | |
| | GPH | 60,23*/73*97** | | 77,4*/95,1** | |
| Drain | mm/inch | 3" | | 3" | |
| Drainage capacity | Lit/min | 200 | | 200 | |
| | GPM | 52,8 | | 52,8 | |

| DIMENSIONS / PACKING DIMENSIONS | | | |
|---|---|---|---|
| Net width / Gross width | mm | 1.095 / 1.205 | 1.095 / 1.205 |
| | inch | 43,1"/47,4" | 43,1"/47,4" |
| Nwt depth / Gross depth | mm | 1.184 / 1.330 | 1.304 / 1.440 |
| | inch | 46,6"/52,3" | 51,3"/56,69" |
| Net height / Gross height | mm | 1.730/ 1.850 | 1.730/ 1.850 |
| | inch | 68,1"/72,8" | 68,1"/72,8" |
| Net weight / Gross weight | Kg | 735 / 786 | 747/853 |
| | lb | 1620,4/1732,8 | 1646,8/1880,5 |
| Volume | $m^3$ | 2,7 | 3,3 |
| | $ft^3$ | 95,3 | 116,5 |

*Programme ECO
**Programme 60ºC

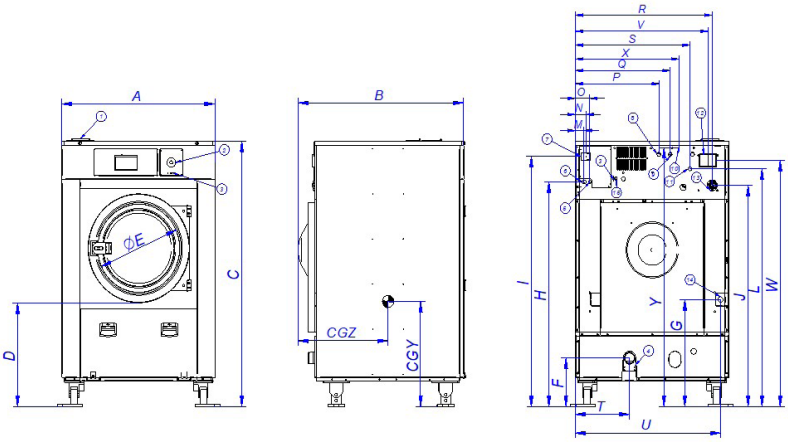


01. Soap dispenser
02. Emergency stop
03. USB port
04. Drain
05. Electric connection to liquid soap pump
06. Electrical connection
07. Main switch
08. Auxiliar water inlet
09. Hot water inlet
10. Equipotential connection
11. Cold water inlet
12. Blur output / Water overload
13. Liquid soap connection
14. Steam connection
15. Ethernet port

| | | A | B | C | D | E | F | G | H | I | J | K | L | M | N | O | P | Q | R | S | T | U | V | W | X | Y | CGY | CGZ |
|---|---|---|---|---|---|---|---|---|---|---|---|---|---|---|---|---|---|---|---|---|---|---|---|---|---|---|---|---|
| LA-35C | mm | 1.095 | 1.184 | 1.767 | 640 | 560 | 328 | 712 | 1.500 | 1.668 | 1.501 | 1.683 | 1.587 | 61 | 74 | 101 | 596 | 676 | 976 | 808 | 384 | 1.037 | 946 | 1.637 | 740 | 1.723 | 795 | 732 |
| LA-45C | mm | 1.095 | 1.304 | 1.767 | 640 | 560 | 328 | 712 | 1.500 | 1.668 | 1.501 | 1.683 | 1.587 | 61 | 74 | 101 | 596 | 676 | 976 | 808 | 384 | 1.037 | 946 | 1.637 | 740 | 1.723 | 795 | 800 |